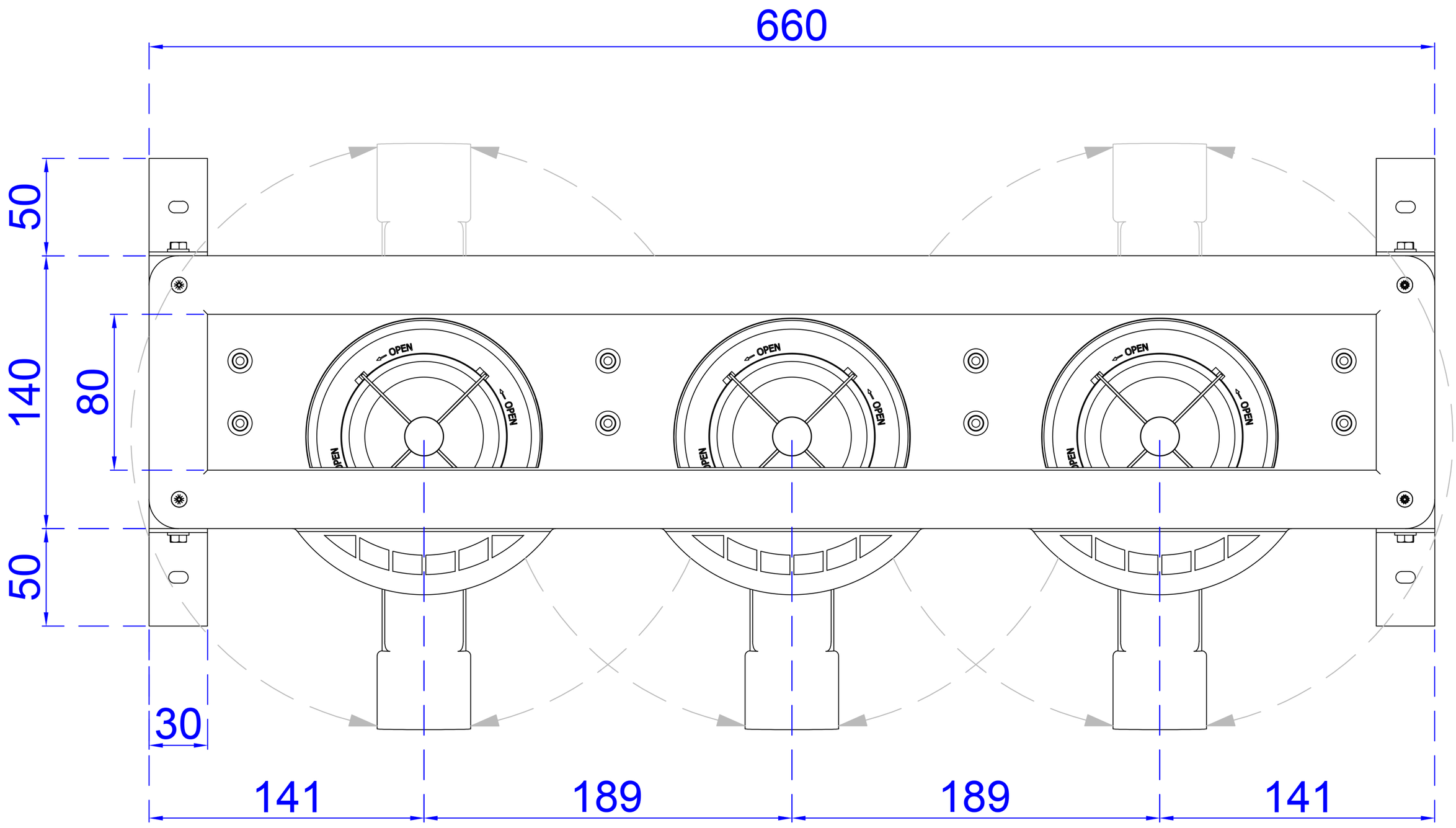
660
50
140
80
50
30
141
189
189
141
OPEN
OPEN
OPEN
OPEN
OPEN
OPEN